Safety Dampers

Top for emergency stopping

The extremely successful TUBUS series from ACE is suitable for emergency stopping, as overrun protection or as end stop dampers. Available in different variations for heavy duty or crane installations, these profile dampers are perfect when loads do not need to be instantly decelerated or when working under extreme conditions.

Manufactured in co-polyester elastomer, the highly resistant absorbers provide high force and energy absorption in areas where other materials fail or where a similarly high service life of up to 1 million load changes cannot be achieved. They are cost-effective and distinguished by the small, light design. With energy absorption within a range of 450 and 17,810 Nm, they can be considered as an alternative to hydraulic end position damping.

Safety Dampers

TUBUS TC and TC-S

Page 264

Crane Installations
Compact powerhouse
Crane systems, Loading and lifting equipment, Hydraulic devices, Electro-mechanical drives

TUBUS TI

Page 266

Irreversible Emergency Stop Damper
Compact one-off deceleration
Emergency stop damping in linear axes, Portal systems, Test stations, Electro-mechanical drives

Extremely durable

Highly resistant co-polyester elastomers

Lightweight designs

Cost-effective use

Heavy-duty versions available

TUBUS TC and TC-S

Safety Dampers

Compact powerhouse

For even more protection: The profile dampers from the TC range of the ACE TUBUS-Series can also be used as safety dampers. These maintenance-free, ready-to-install damping elements made of co-polyester elastomer have been specially developed for use in crane systems and fulfil the international industry standards OSHA and CMAA. In the special TC-S design, managed to achieve the spring rate required for crane systems with the unique dual concept.

Whether TC-S or TC, this range of models represents a cost-effective solution with high energy absorption for energy management systems. The very small and light design of Ø 64 mm to Ø 176 mm progressively covers energy absorption within a range of 450 Nm to 17,810 Nm.

The profile dampers from the TC range protect cranes, loading and lifting equipment, hydraulic units and much more.

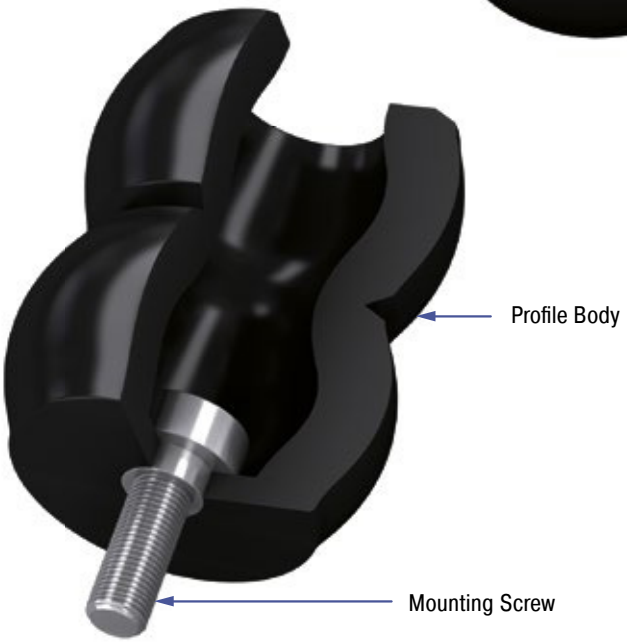

Technical Data

Energy capacity: 630 Nm/Cycle to 17,810 Nm/Cycle

Energy absorption: 31 % to 64 %

Dynamic force range: 80,000 N to 978,000 N

Operating temperature range: -40 °C to +90 °C

Construction size: 64 mm to 176 mm

Material hardness rating: Shore 55D

Material: Profile body: Co-Polyester Elastomer

Mounting: In any position

Environment: Resistant to microbes, seawater or chemical attack. Excellent UV and ozone resistance. Material does not absorb water or swell.

Impact velocity range: Max. 5 m/s

Torque max.:
M12: 50 Nm
M16: 40 Nm (DIN912)
M16: 120 Nm (shouldered screw)

Application field: Crane systems, Loading and lifting equipment, Hydraulic devices, Electro-mechanical drives

Note: Suitable for emergency stop applications and for continous use. For applications with preloading and increased temperatures please consult ACE.

On request: Special strokes, -characteristics, -spring rates, -sizes and -materials.

Issue 08.2016 – Specifications subject to change

TC

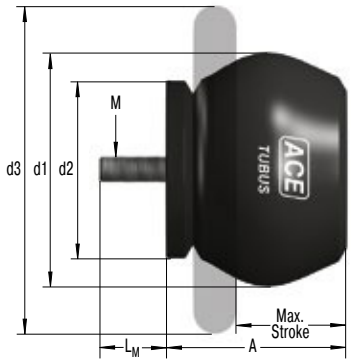

Model Type TC

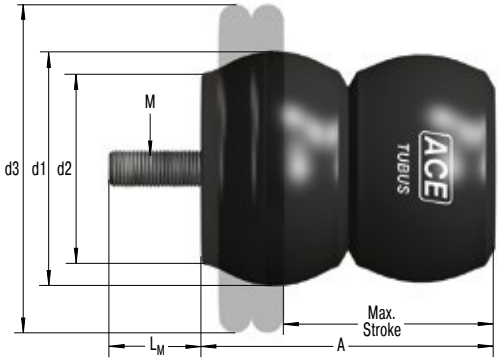

Model Type TC-S

Characteristics

Type TC90-49
Energy-Stroke Characteristic (dynamic)
(with impact velocity over 0.5 m/s)

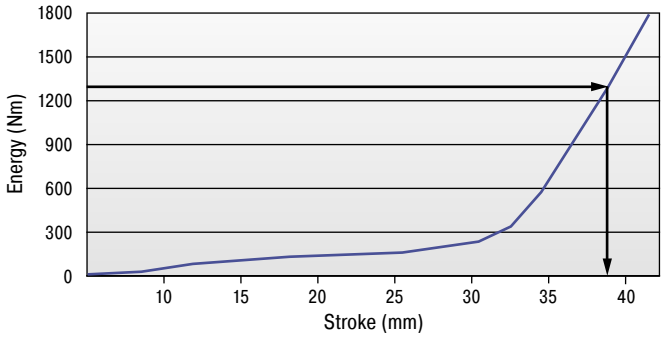

Type TC90-49
Force-Stroke Characteristic (dynamic)
(with impact velocity over 0.5 m/s)

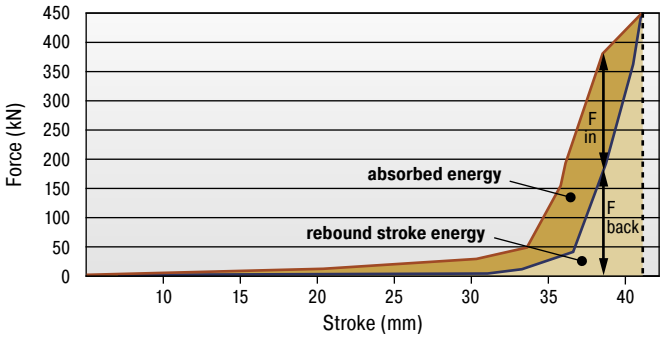

With the aid of the characteristic curves above you can estimate the proportion of the total energy that will be absorbed.
Example: With impact energy of 1,300 Nm the Energy-Stroke diagram shows that a stroke of about 38 mm is needed.
On the Force-Stroke diagram you can estimate the proportion of absorbed energy to rebound energy at this stroke length.
Note: With these types the return force towards the end of the stroke is significant and we recommend you try to use a minimum of 90 % of the total stroke available.
Dynamic (v > 0.5 m/s) and static (v ⩽ 0.5 m/s) characteristics of all types are available on request.

The calculation and selection of the most suitable damper should be carried out or be approved by ACE.

Ordering Example **TC83-73-S**

TUBUS Crane Buffer
Outer-Ø 83 mm
Stroke 73 mm
Model Type Soft

Performance and Dimensions

TYPES	[1] W_3 Nm/cycle	Emergency stop W_3 Nm/cycle	Stroke max. mm	A mm	d1 mm	d2 mm	d3 mm	L_M mm	M	Weight kg
TC64-62-S	450	630	62	79	64	52	89	12	M12	0.175
TC74-76-S	980	1,372	76	96	74	61	114	12	M12	0.261
TC83-73-S	1,940	2,715	73	94	83	69	127	12	M12	0.328
TC86-39	1,210	1,695	39	56	86	78	133	12	M12	0.284
TC90-49	1,640	2,295	49	68	90	67	124	12	M12	0.265
TC100-59	1,785	2,500	59	84	100	91	149	12	M12	0.513
TC102-63	1,970	2,760	63	98	102	82	140	22	M16	0.633
TC108-30	1,900	2,660	30	53	108	77	133	12	M12	0.392
TC117-97	3,710	5,195	97	129	117	100	188	16	M16	1.053
TC134-146-S	7,310	10,230	146	188	134	117	215	30	M16	1.573
TC136-65	4,250	5,950	65	106	136	106	178	16	M16	1.173
TC137-90	6,350	8,890	90	115	137	113	216	21	M16	1.193
TC146-67-S	8,330	11,660	67	118	146	99	191	16	M16	1.573
TC150-178-S	8,860	12,400	178	241	150	132	224	16	M16	2.581
TC153-178-S	7,260	10,165	178	226	153	131	241	16	M16	2.493
TC168-124	10,100	14,140	124	166	168	147	260	16	M16	2.533
TC176-198-S	12,725	17,810	198	252	176	150	279	16	M16	3.685

[1] Max. energy capacity per cycle for continous use.

TUBUS TI

Safety Dampers

Compact one-off deceleration

Once only, but safely: ACE now offers these innovative single use TUBUS TI absorbers for emergency stop applications as an alternative to the successful TUBUS profile dampers. In comparison to standard elastomer absorbers, these safety dampers ensure energy absorption of up to 96 % without a recoil effect. The dampers are deformed in the impact and cannot be reused afterwards.

The easy to assemble and maintenance-free single hit damper are also a cost-effective alternative to the hydraulic safety shock absorbers from ACE. They are made of a high quality synthetic with an inside metal core and absorb up to 4,510 Nm energy.

The TUBUS TI is mainly used as emergency stop damping in linear axes, tool machines, servo drives with high speeds and other similar areas.

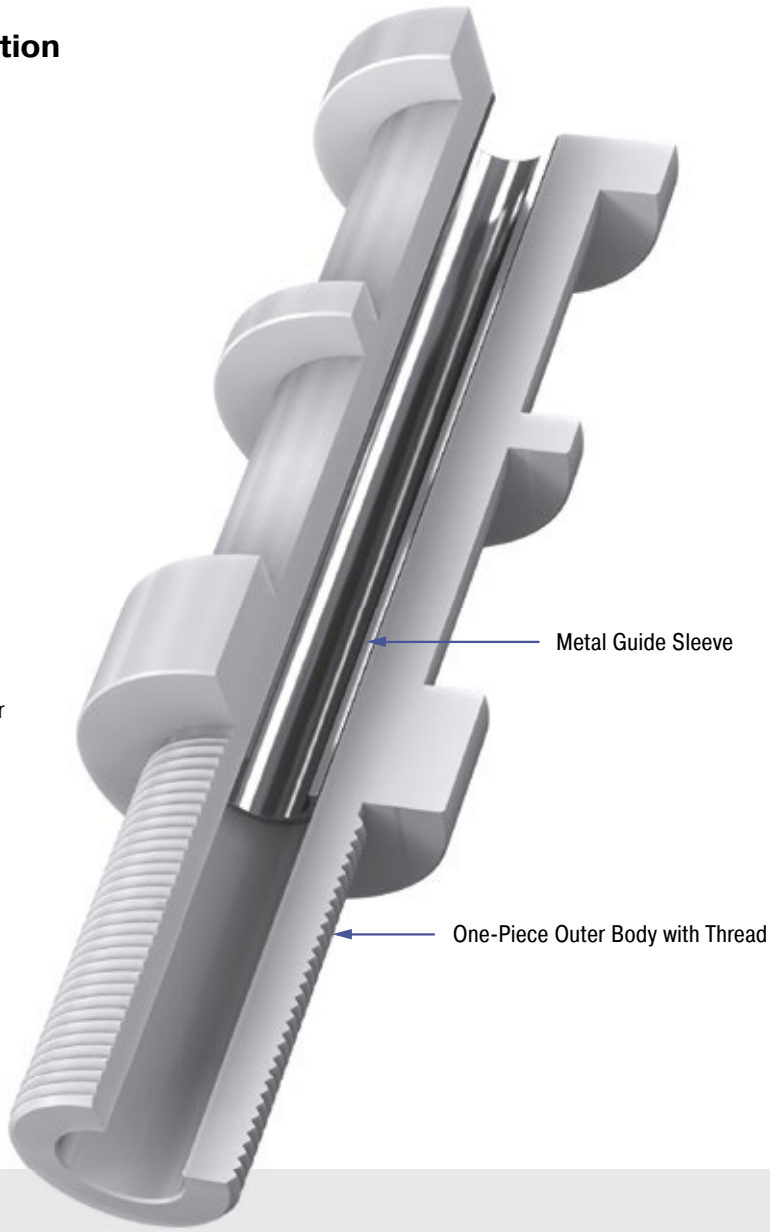

Technical Data

Energy capacity: 562 Nm/Cycle to 4,510 Nm/Cycle

Energy absorption: 91 % to 96 %

Dynamic force range: 37,100 N to 121,100 N

Operating temperature range:
-40 °C to +90 °C, Co-polyester Elastomer
-25 °C to +50 °C, Polymer

Construction size: 32 mm to 50 mm

Material: Profile body: Co-Polyester elastomer or polymer; Guide sleeve: Metal

Mounting: In any position

Environment: Resistant to lubricants and chemical attack according to resistance list. No UV resistance.

Impact velocity range: Max. 5 m/s

Torque max.: Finger tight

Application field: Emergency stop damping in linear axes, Portal systems, Test stations, Electro-mechanical drives

Note: The single-use damper must be replaced after each impact.

On request: Other construction sizes on request.

Issue 08.2016 – Specifications subject to change

TI16

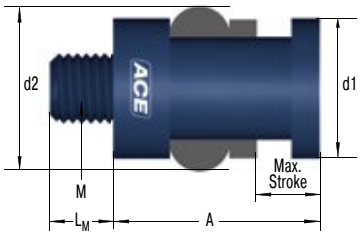

TI24

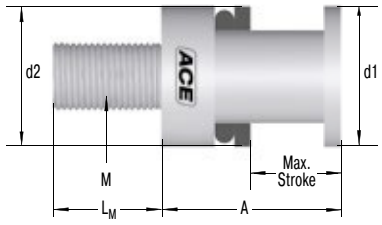

TI30

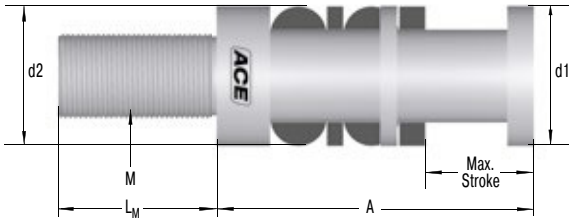

Characteristics

Force-Stroke TI16
Dynamic trials on a drop test rig

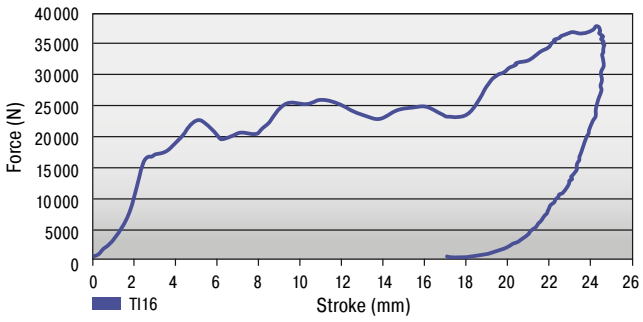

Total energy: 562 Nm
Absorbed energy: 511 Nm
Efficiency: 91 %

Force-Stroke TI30 and TI24
Dynamic trials on a drop test rig

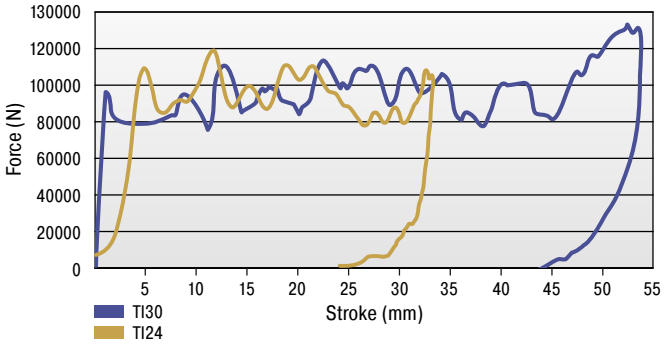

Total energy: 4,510 Nm
Absorbed energy: 4,309 Nm
Efficiency: 96 %

Total energy: 2,701 Nm
Absorbed energy: 2,545 Nm
Efficiency: 94 %

The characteristic values have been established under dynamic load.

The calculation and selection of the most suitable damper should be carried out or be approved by ACE.

Ordering Example **TI16-25-1**

TUBUS irreversible
Thread Size M 16
Stroke 25 mm
Number of bellows

Performance and Dimensions

TYPES	Energy capacity emergency use Nm/cycle	Stroke max. mm	Reacting force N	A mm	d1 mm	d2 mm	L_M mm	M	Depth thread hole min. mm	Weight kg
TI16-25-1	562	25	37,138	48	32	38	15	M16x2	25	0.050
TI24-33-1	2,701	33	113,590	64.5	50	50	40	M24x3	40	0.140
TI30-52-2	4,510	52	121,130	113	50	50	57	M30x3.5	63	0.248

Issue 08.2016 – Specifications subject to change